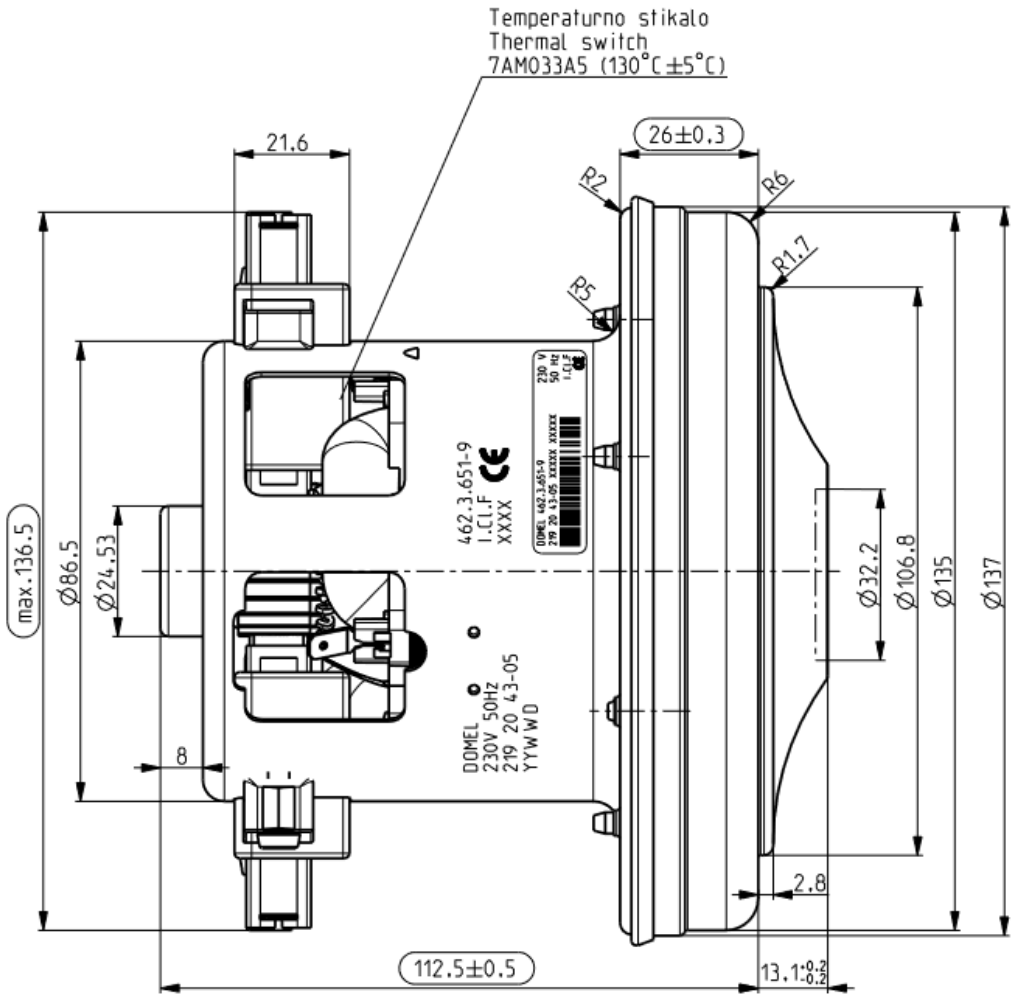
Temperaturno stikalo
Thermal switch
7AM033A5 (130°C ±5°C)
21.6
26±0.3
R2
R6
R1.7
R5
max.136.5
Ø86.5
Ø24.53
8
462.3.651-9
I.Cl.F
XXXX
DOMEL
230V 50Hz
219 20 43-05
YYW WD
Ø32.2
Ø106.8
Ø135
Ø137
2.8
112.5±0.5
13.1

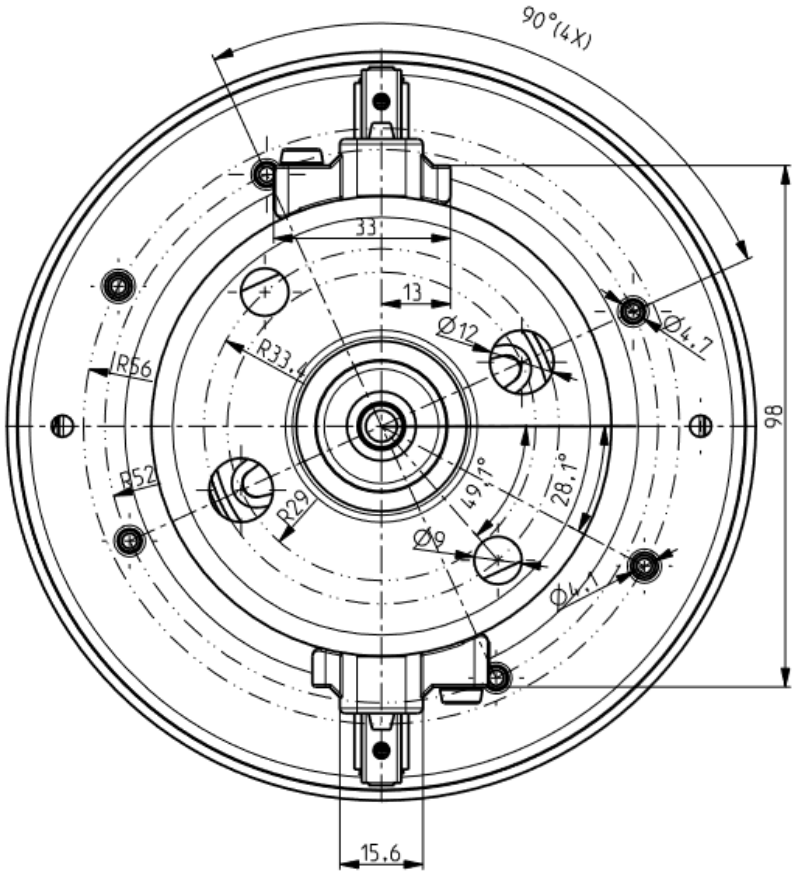
90°(4X)
33
13
Ø12
Ø4.7
R56
R33.4
R52
R29
49.1°
28.1°
Ø9
Ø4.1
98
15.6